[redacted]

REP-REP-RAF2034-3441006 REP-REP-RAF2034-3441006 - Adjusting parking brake - V.13, [redacted]

ISTA system version	[redacted]	Data version	[redacted]	Programming data	-
VIN	[redacted]	Vehicle	[redacted]		
Int.lev.works	-	Int.lev.(cur.)	-	Int.lev.(tar.)	-
Mileage	-				

34 41 014 Adjusting parking brake

Special tools required:

- 32 1 030

Perform inspection in the following manner:

When 1st ratchet is engaged, no braking force should be exerted.

The difference in wheel circumferential forces between the left and right wheels may deviate by max. 30% from the greater value (measured on brake test stand).

In event of larger deviations of wheel circumferential force: carry out readjustment.

Braking with locked wheels must be possible with the parking brake.

The parking brake must be reset if the actuation stroke is greater than 10 teeth.

Note:
Accurate adjustment of the parking brake is only possible if the parking brake Bowden cables and all moving parts on the parking brake move easily and function correctly.

Basic setting of the parking brake is required:

- Parking brake shoes and add-on parts are replaced
- Brake discs are replaced
- In event of excessive actuation stroke (10 teeth)
- When replacing parking brake Bowden cables

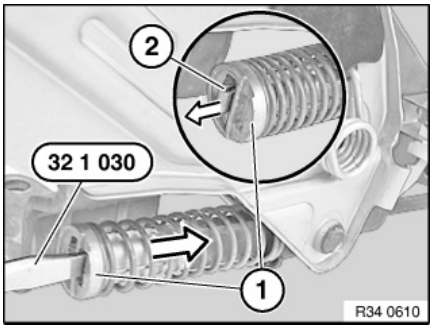

1. Adjusting instructions for brake pads (basic setting)

Unclip gaiter for parking brake lever.

Lock adjustment unit (ASZE).

Actuate parking brake lever. Connect special tool 32 1 030. Press limit position (1) of adjusting spring back to such an extent that retaining hook (2) engages in limit position (1).

Completely unscrew one wheel stud on each rear wheel.

Installation note:
Tightening torque 36 10 1AZ.

Turn wheel until adjustment screw is visible in threaded hole.

[redacted]

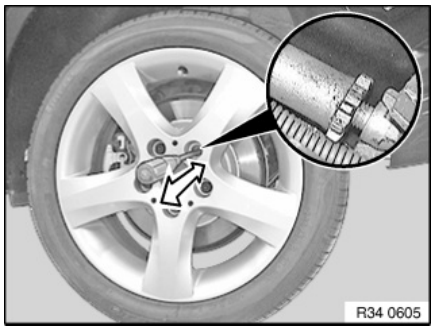

Turn adjusting screw with a screwdriver until wheel can not be turned anymore by hand.

Then at adjusting screw:

- Duo-servo parking brake ∅ 185 release by 8 catches
- Duo-servo parking brake ∅ 160 release by 9 catches

Attention!

Basic setting with less than 8 catches on the duo-servo parking brake may lead to the brake pads being damaged. A reduction in the number of catches on the duo-servo parking brake to shorten lever travel is not permitted.

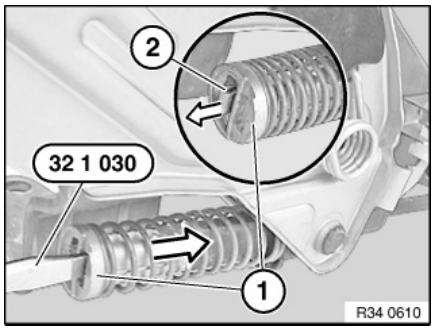

Unlock adjustment unit (ASZE).

Lever out restraining hook (2) with a suitable screwdriver.

Restraining hook (2) must detach from limit position (1) of adjusting spring.

Attention!

Follow notes for Brake testing for test stand.

2. Adjusting instructions for parking brake Bowden cables

The parking brake lever must be applied 5 times with medium hand force.

2.1	On brake test stand
0th tooth (parking brake released):	Vehicles with manual transmission: Shift lever in neutral position. Vehicles with automatic transmission: Selector lever position "N". - Without locking differential ≤150 N. - With locking differential ≤ 200 N (possibly odd display).
1st tooth:	No brake force increase with regard to the 0th tooth. Indicator light may light up.
2nd tooth:	Indicator lamp must be lit.
3rd tooth:	Increase in braking force.
5th tooth:	The brake force display must have reached ≥ 400 N.

Checking brake force differential at wheel:

Apply parking brake until a wheel circumferential force (brake force display) of min. 1000 N is reached.

Max. permitted brake force differential right/left ≤35 % (referred to greater brake value).

3. Bedding in the duo-servo parking brake

The following bedding-in instructions are applicable in case of insufficient braking effect or after replacing brake discs and/or brake pads.

[redacted]

3.1 On brake test stand

Apply parking brake lever until wheel circumferential force at first wheel is 800 N.

Lock parking brake lever in next lower tooth.

Attention!

Bedding-in time maximum 2 min!

3.2 When driving on road

(If possible on company grounds or on an unused road)

When driving at low speed (maximum 40 km/h) apply parking brake lever until a braking effect can be felt.

Pull parking brake lever into the next catch and continue driving for maximum approx. 400 metres (maximum 40 km/h).

A basic requirement is that parking brake is adjusted uniformly.

Note:
If necessary, repeat bedding-in procedure.

Allow brake to cool down sufficiently.